Motor control valve in two way form with bellow sealing, DN200 EN-GJS-400-18-LT (GGG-40.3), PN 16

Body: EN-GJS-400-18-LT (GGG-40.3), two way form
for heat transfer oil
Pressure range: PN 16
Immersion length acc. to DIN EN 558, basic series 1
Flanges acc. to DIN EN 1092-2 type 21
Spindle sealing: four wall bellow
and safety stuffing box
Internal parts: stainless steel, replaceable seat rings
Flow characteristic: linear
Positioning ratio: 30:1
Leakage: < 0,01% Kvs



Actuator: with integrated manual emergency operation
and load dependent limit switches

Thrust:	12 kN / 152 W (appendix ...f)
	15 kN / 152 W (appendix ...h)
	20 kN / 206 W (appendix …i)
	25 kN / 206 W (appendix …k)
Power supply:	230V / 50Hz
Alternatively:	230V / 60Hz (appendix ...f6/...h6/…i6/…k6)
Other voltages:	115V 50/60Hz, 24V 50/60Hz,
	24V DC, 400V 3Ph. on request

Motor rating standard acc. to DIN EN 60034-1: S4 – 30% – 600 c/h
Protection class acc. to DIN EN 60529: IP65

Accessories, special types**:**
Add. limit switches load dependent
Add. signal switches travel dependent
Feedback potentiometer
Integrated positioner
Feedback signal 4-20mA / 0-10V
Actuator heater (on request)
Other positioning speed (on request)
Other kvs - values (on request)
Flange drillings acc. to ANSI / JIS (on request)

Order text:
Motor control valve in two way form
EN-GJS-400-18-LT (GGG-40.3), PN16, DN200, Kvs 630
Spindle sealing with bellow
Power supply . . ., closing pressure . . . bar
List-No. 451 420 H . , accessories . . .

Pressure-temperature ratings acc. to DIN EN 1092-2:

by:	-10…120	150	200	250	300	350	°C
PN 16	16	15,5	14,7	13,9	12,8	11,2	bar

DN	**List-No.** PN 16	**Kvs** m³/h	**Stroke** mm	**Pos. time** sec	**Closing pressure*** (bar) 12 kN	15kN	20kN	25kN
200	451 420Hf	630	60	72	3,1			
200	451 420Hh	630	60	90		4,0		
200	451 420Hi	630	60	72			5,6	
200	451 420Hk	630	60	72				7,1

** higher closing pressure on request*

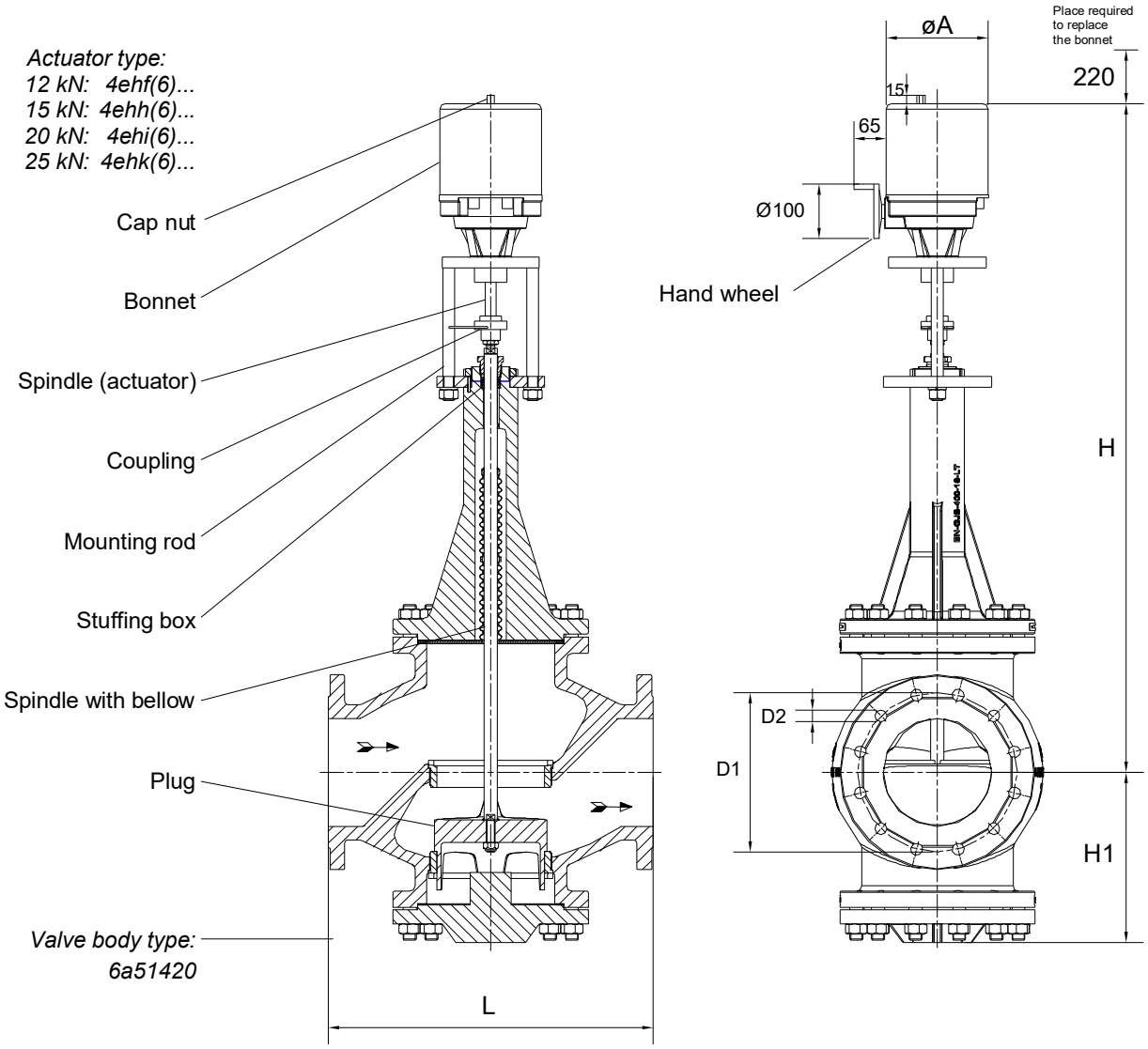

Dimensions

DN 200	12-15kN (...f/...h)	20-25kN (...i/...k)
Height H	1240	1315
Length H1	315	315
Length L	600	600
Weight kg	310	315
Diameter A	188	216

Flange connections acc. to DIN EN 1092-2

PN	D1	D2	Quantity of screws	Thread
16	295	22	12	M20

Electrical wiring *230 /115 /24 V 50/60 Hz*:*

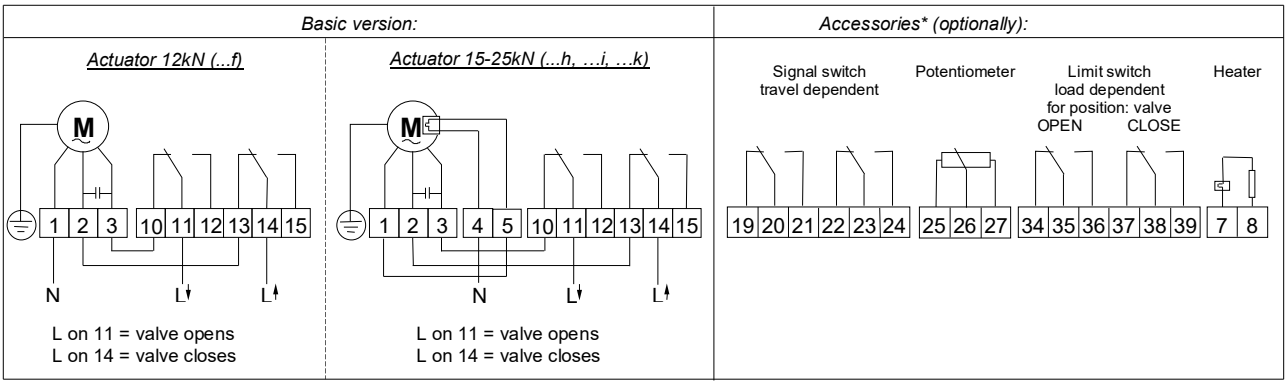

** = for other voltages / accessories see wiring diagrams in operating instruction 4eh80_b.*

1 Position regulator PEL 100 (option)

1.1 Functionality and functions of the position regulator

The electronic positioner serves to control, regulate and position final controlling elements, such as linear, part-turn and turn actuators. The position regulator operates the actuator into the position defined by a continuous input signal. The controlled variable (actual value) is compared to the reference variable (setpoint), and, in case of deviation, a manipulated variable is generated to trigger the control element. The triggering is kept until the setpoint and the actual value are equal.

The actual value requires a potentiometer within the actuator to record the movement of the actuator.

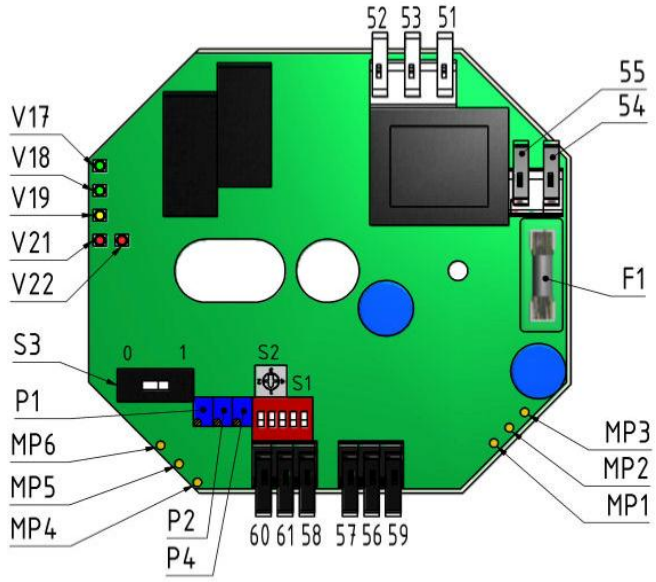

Fig. 1.1: Position regulator board PEL 100

The light emitting diodes on the position regulator board indicate the status of the electronic positioner.

LED	Meaning	Indication
V17	Supply voltage ok	Green
V18	Operation “Ingoing actuator stem” (OPEN)	Green
V19	Operation “Outgoing actuator stem” (CLOSED)	Yellow
V21	Dead time active	Red
V22	E1 < 4 mA	Red

Table: Meaning of the LEDs on the position regulator board

Settings such as stroke adjustment, split range, reversing and dead zone are made via the trimmers P1, P2, P4.

The DIP switches at S1 define additional functions such as zero point presetting, spreading of the potentiometer signal and the behaviour on loss of signal.

A minimum dead time of 200 ms is set as default in the position regulator to avoid sudden changes of direction or very short switching on and off procedures.

As standard, the feedback signal is available on the position regulator and indicates the current position of the control element. The range corresponds to the input signal range.

The feedback signal is not galvanically isolated from the input.

The positioning signal type (voltage or current) is defined by the configuration of the terminals. Switching over or re-soldering is not required.

1.2 Assembly of the position regulator

The mechanical set-up is performed in the factory. Subsequent fitting of the position regulator is not always possible. If the actuator is designed for retrofitting of the position regulator, a PEL kit can be used for retrofitting.

The actuator has to be equipped with a potentiometer required for operation (and, if necessary, the switching and signalling device) before installling the position regulator.

Once the actuator is mounted on the valve and the switching and signalling device is set, the zero point of the potentiometer has to be set. The procedure is described the “Adjustment of the potentiometer” chapter.

1.3 Electrical connection



Mains connection and commissioning of the linear actuator requires expert knowledge on the erection of power installations (DIN VDE 0100), knowledge on the prevention of accidents and the special conditions for commissioning the linear actuator.
These tasks may only be carried out by qualified personnel. ***Failure to observe this warning can result in death, serious injury or considerable property damage!***

- Perform mains connection with switched off power supply only! Safeguard against accidental switching on!
- When installing electric lines and the mains connection, the DIN/VDE regulations for the erection of power installations as well as the provisions of the local electricity board must be observed!
- Check whether the mains connection voltage and the mains frequency comply with the data on the name plate of both the linear actuator and the actuator motor.
- The conductor cross section must always be sized according to the power consumption of the linear actuator and the required cable length. The permissible cable cross section is 0.8…2.5 mm² (AWG 28…12).



- Mains disconnection with regard to the installation: For the disconnection and voltage release from the power line to the actuator for maintenance and adjustment work, a suitable breaker unit must be used ensuring an all-pole disconnection (except the earth wire). This breaker unit must be lockable in the state of breaking and be safeguarded against accidental switching on.
- Mains fuse protection with regard to the installation: max. 6 A.

1.3.1 Configuration of terminals



To avoid interference pulses on the signal cables, they have to be laid separately from the supply voltage cables. We recommend using a shielded cable with voltage signals and placing the shield on the protective earth (PE) of the actuator housing.

Terminal X4:

Terminal	Function	
60	mA output	0 (4)…20 mA
61	Volt output	0 (2)…10 V
58	GND	Ground
57	GND	Ground
56	Volt input	0 (2)…10 V
59	mA input	0 (4)…20 mA

The impedance of the mA input is 50 Ω. When using the volt input, the impedance is 20 kΩ.

Terminal X2:

Terminal	Function		
54	L	Mains input phase	50/60 Hz
55	N	Mains input, protective earth	

Terminal X3:

Terminal	Function		
51	L⇧	Phase, direction “Ingoing stem”	50/60 Hz
52	N	Mains input, protective earth	
53	L⇩	Phase, direction “Outgoing stem”	50/60 Hz

Plug X4:

A plug is used to connect the potentiometer to the position regulator board.

Pin	Function	
1	Maximum value	Blue
2	Measured at the slider	Green
3	Zero point	Red

Colour assignment depends on the actuator type

1.3.2 Determining the input and output signal

The actuator is either preconfigured to 0…10 V, 0…20 mA or 2…10 V, 4…20 mA. Depending on the configuration, the cables of the input and output signals are connected to terminal X4. The configuration of the position regulator can be modified. The procedure is described in chapter 1.4.6 “Modification of the preset setpoint signal range”.

1.4 Commissioning and settings

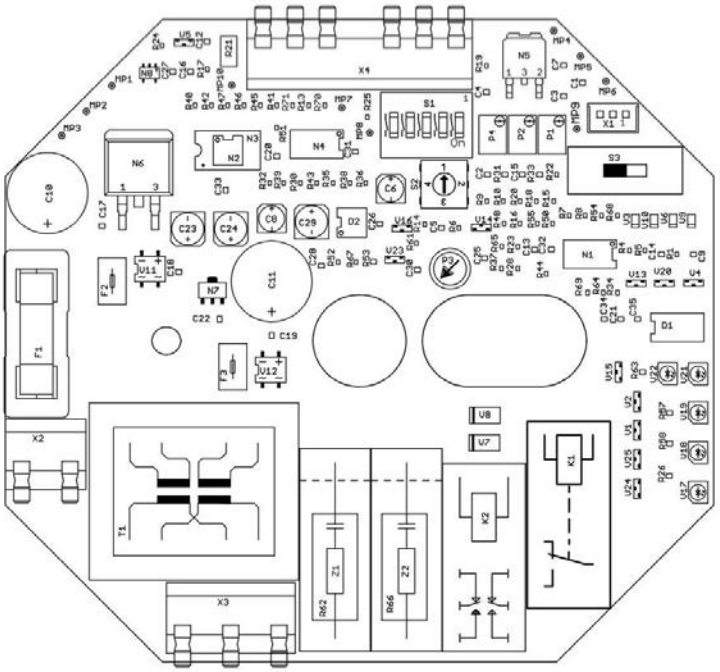

Fig. 1.4: Electronic positioner PEL 100, parameters

Trimmer

P1	Adjustment of lower limit value	Clockwise rotation reduces the value
P2	Adjustment of upper limit value	Clockwise rotation reduces the value
P4	Span adjustment	Counterclockwise rotation results in electronic spreading of the potentiometer signal

Switches

	Description	**ON**	**OFF**
S1.1	Zero point preselection	0 mA	4 mA
S1.2	Spread	Off	On
S1.3	FAIL CLOSE	On	Off
S1.4	FAIL OPEN	On	Off
S1.5	FAIL function	On	Off

	Description	Position	
S2	Dead zone	1 2 3 4	1.5 % 1.0 % 0.5 % 0.25 %
S3	Inverse operation / reversing	0 1	Off On

Measuring points

	Description		**Signal**
Mp1	Supply voltage +15 V		+15 V
Mp2	Supply voltage –5 V		–5 V
Mp3	Ground		
Mp4	Voltage at max. value (actual value)	At 0…10 V, or 0…20 mA	10.1 V
Mp5	Voltage from the potentiometer slider		
Mp6	Voltage at min. value (actual value)	At 0…10 V, or 0…20 mA At 2…10 V, or 4…20 mA	0 V 2 V

F1	Fuse	250 mA / 230V 1 A / 24 V
V1 + V2	Quenching element	Possibly required spark quenching elements for relay contacts

1.4.1 Electric adjustment to the positioning travel

The electronic positioner is configured for the indicated travel in the factory. Only minor adjustments should therefore be required.



Prerequisite for further actions:

- Proper mounting of the actuator on the valve
- Correct adjustment of the switching and signalling unit to the valve stroke
  Zero positon of the potentiomenter has to match the lower end position of the stroke
- Adjustment of the end positon switches to the valve stroke is completed

The electronic positioner can be set so that the actuator is switched off in the end positions either via the switches (DE, WE) or via the electronic positioner itself.

If the actuator is switched off via the switches, the trimmers on the electronic positioner have to be set as to ensure that the LEDs are only just illuminated when reaching the end position.

The lower setpoint (0 or 4 mA, 0 V) is defined as the lower end position for the input.

Trimmer P1 is turned counterclockwise until the actuator is switched off via the respective switch and LED V19 is only just illuminated. This can be checked by turning back the trimmer.

Trimmer P2 in combination with LED V18 is used in the upper end position.

The setpoint for the upper end position is predefined.

By turning trimmer P2 clockwise, the switch-off point is increased. In case of tripping via switches, the position of the trimmer has to be changed until the LED is only just illuminated.

If the swing angle of the potentiometer cannot be fully used as the travel is very small, the input range can be adapted using the spread function. The function is activated if switch S1.2 is set to OFF.

By turning trimmer P4 counterclockwise, the upper switch-off point is reduced.

1.4.2 Setting the dead zone

The set dead zone of the actuator depends on the actuator type. The parameter is preset in the factory and should not be changed. If the dead zone is set too narrow, the actuator oscillates at the setpoint, which results in premature wear of both the position regulator and the actuator.

If an oscillation is detected, this can be avoided by increasing the dead zone.



When replacing the electronic positioner, accept the preset values.

1.4.3 Reversing

If the running direction of the actuator is to be reversed with regard to the setpoint, this can be achieved by changing over at switch S3.

The end position or the travel possibly has to be readjusted (refer to chapter 1.4.1 “Electric adjustment to the positioning travel”).

1.4.4 Wire break detection

The wire break detection determines whether the input signal is incorrect. The function can be activated or deactivated using switch S1.5. The input signal has to be set to 4…20 mA or
2…10 V as a prerequisite for this function.



If the wire detection function is used for an input signal of 0…20 mA or 0…10 V, the position regulator fails.

As soon as the input signal falls below 3.5 mA, the FAIL function is tripped. Switches S1.3 and S1.4 can be used to define the actuator behaviour on loss of signal.

Position of the DIP switches	Function
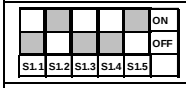	FAIL AS IS
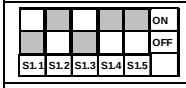	FAIL OPEN
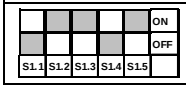	FAIL CLOSE

Fig. 1.4.4: Switch positions of S1.1, S1.3, S1.4, S1.5 for behaviour on loss of signal

1.4.5 Split range operation

To set the split-range operation, the actuator is controlled with the setpoint for the upper end position (e.g. 12 mA).

Adjust trimmer P2, until the stroke corresponds to the upper end position. Counterclockwise rotation makes the actuator stem retract.

The lowest settable value for the upper switch-off point is ~8 mA or ~4.0 V.

The setpoint is now set to the lower end position (e.g. 6 mA). Counterclockwise rotation of trimmer P1 changes the position of the actuator stem to outgoing actuator stem.

The top settable value for the lower switch-off point is ~13.2 mA or ~6.6 V.

Check the end positions by approaching the upper and lower end position again.

1.4.6 Modification of the preset setpoint signal range

The electronic position can be preset without input signal by means of measuring points. The adjustment to the actuator is made according to the “Electric adjustment to the positioning travel” chapter.

Set signal 4…20 mA or 2…10 V:

Configuration of the DIP switches S1:

					ON
					OFF
S1.1	**S1.2**	**S1.3**	**S1.4**	**S1.5**	

- Connect voltage to the electronic positioner on terminals 54 and 55
- Measure the voltage between measuring point 3 and measuring point 6
- Use trimmer P1 to set voltage to 2.0 V
- Measure the voltage between measuring point 3 and measuring point 4
- Use trimmer P2 to set voltage to 10.0 V

Set signal 0…20 mA or 0…10 V:

Configuration of the DIP switches S1:

					ON
					OFF
S1.1	**S1.2**	**S1.3**	**S1.4**	**S1.5**	

- Connect voltage to the electronic positioner on terminals 54 and 55
- Measure the voltage between measuring point 3 and measuring point 6
- Use trimmer P1 to set voltage to 0.0 V
- Measure the voltage between measuring point 3 and measuring point 4
- Use trimmer P2 to set voltage to 10.0 V

1.5 Technical data

Control signal	0(4)…20 mA, Ri approx. 50 Ω 0(2)…10 V, Ri > 100 kΩ
Feedback signal	0(4)…20 mA, load 500 Ω 0(2)…10 V corresponds to the control signal
Indication	LED's
Potentiometer	1000 Ω to 10 kΩ
Switching stage	Relay contacts max. 250 V / 50/60 Hz, 2 A
Power supply	24VAC /110V AC / 230 VAC
Power consumption	
Connection terminals	Snap-type terminal for 1.5 mm² solid wire or cords with wire end sleeves
Ambient temperature	–10 °C…+50 °C

1.5.1 Wiring examples

The wiring diagrams are just examples and serve as orientation. The terminal plan attached to the actuator is binding.

The connection of the load-dependent DE and the travel-dependent WE switches depends on the application (valve type, tripping in end position, ...) and has to be determined by the operator.

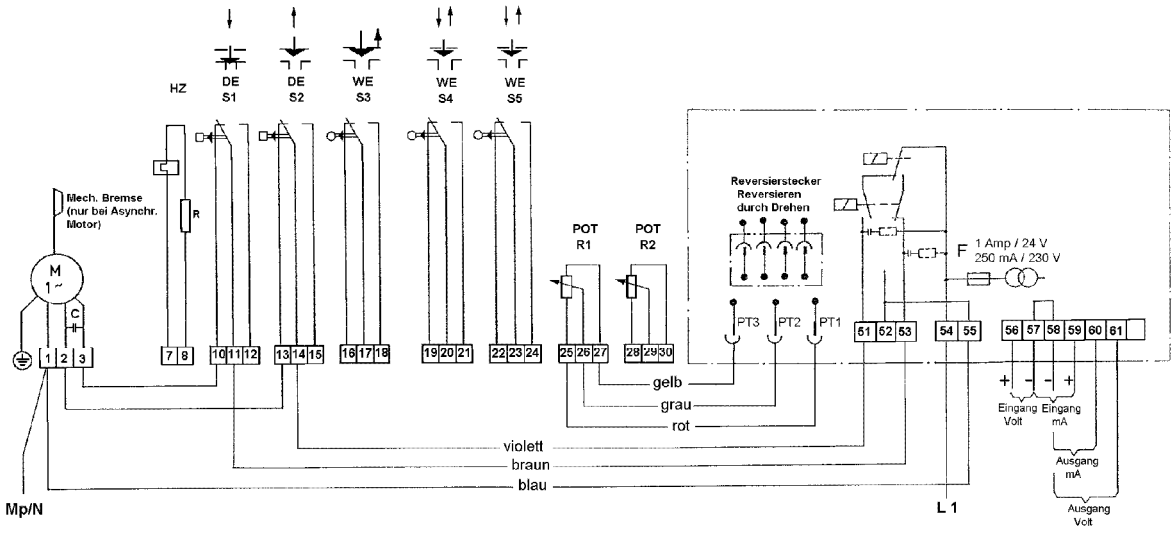

Fig. 1.5.1-1: Wiring diagram with 2 DE switches S1 and S2

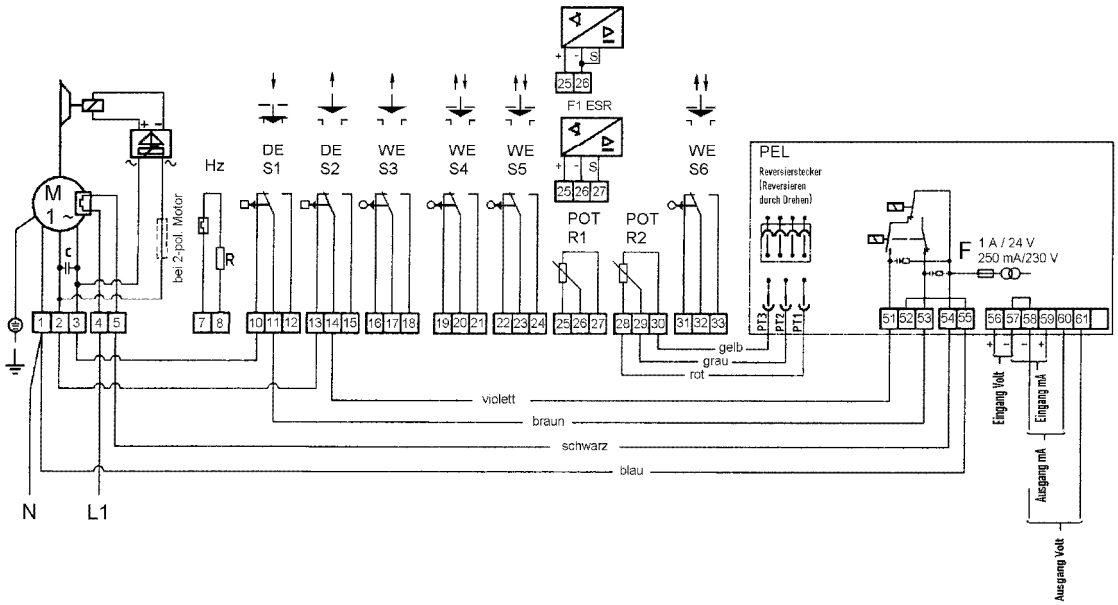

Fig. 1.5.1-2: Wiring diagram with 2 DE switches S1 and S2, 1-phase AC motor with thermoswitches

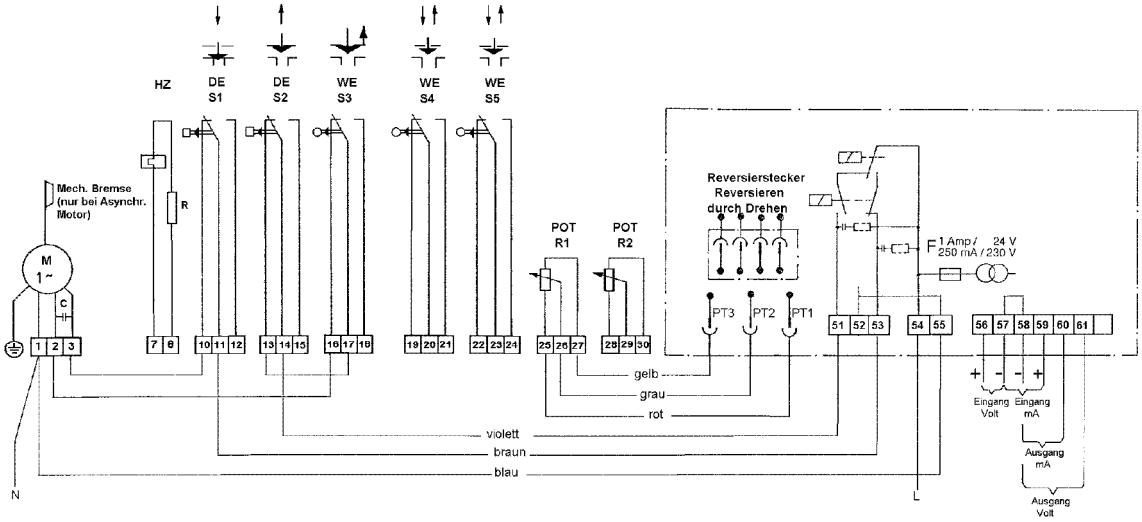

Fig. 1.5.1-3: Wiring diagram with 2 DE switches S1 and S2 and WE switch S3

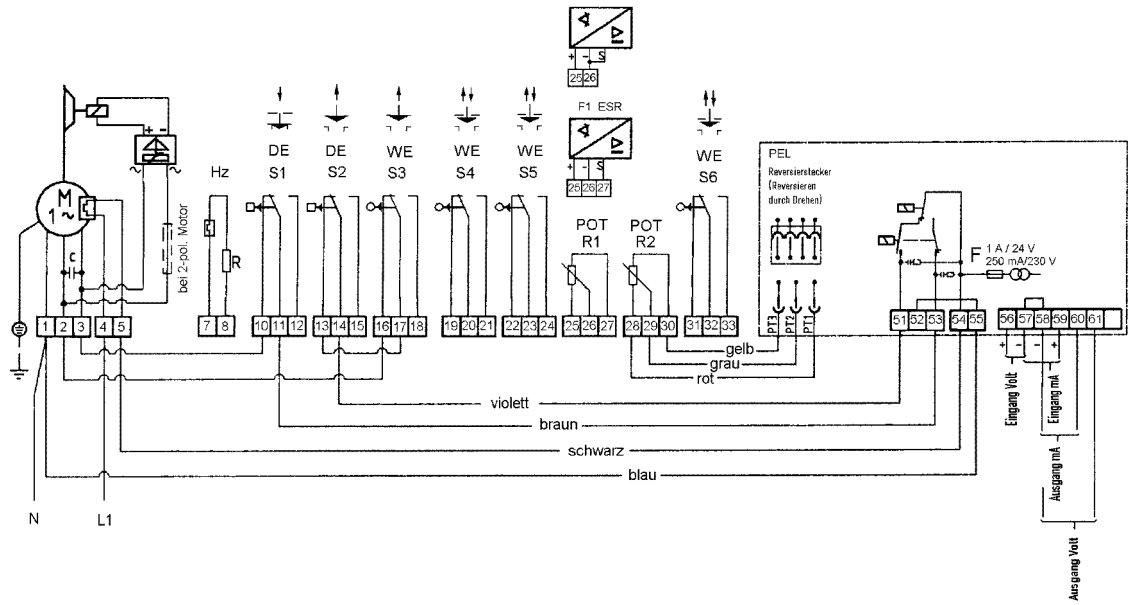

Fig. 1.5.1-4: Wiring diagram with 2 DE switches S1 and S2 and WE switch S3, 1-phase AC motor with thermoswitches

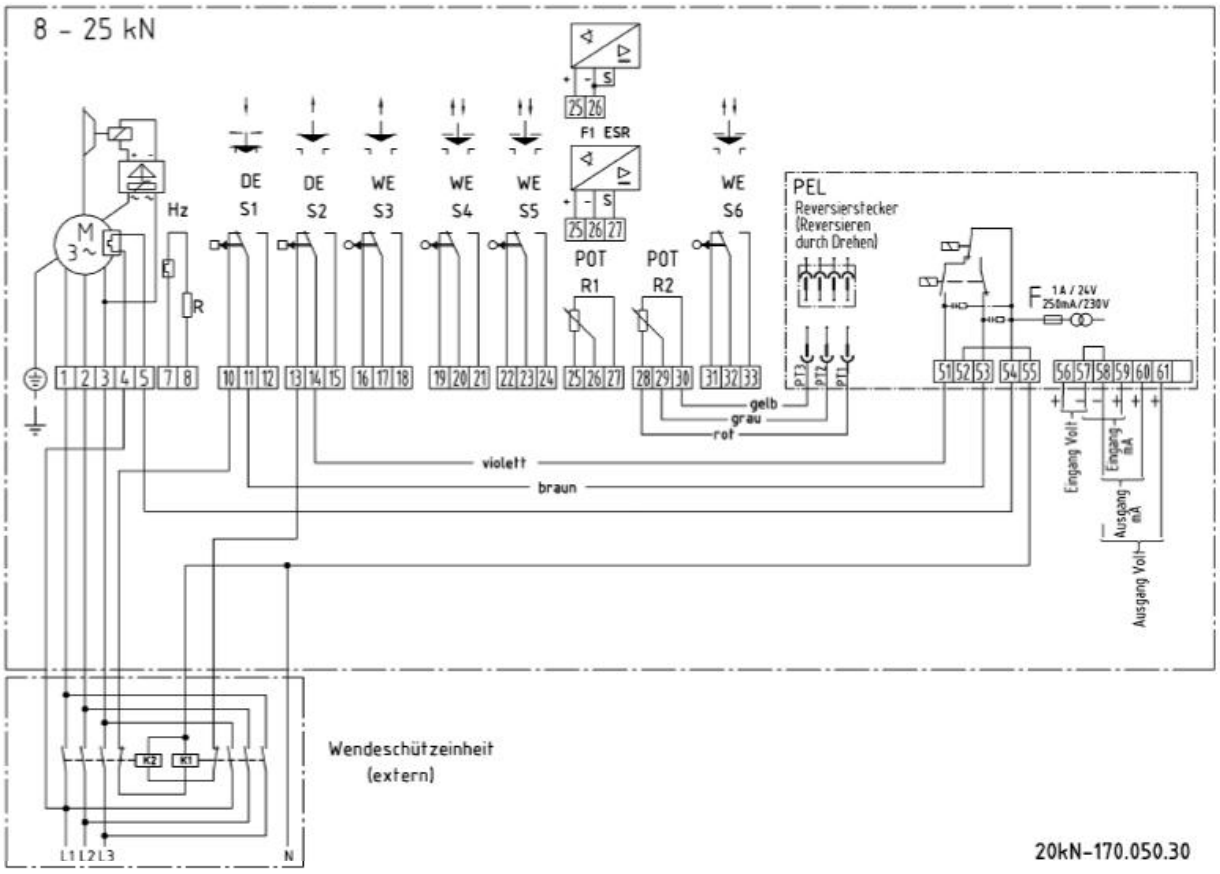

Fig. 1.5.1-5: Wiring diagram with 2 DE switches S1 and S2 and WE switch S3, 3-phase AC motor, separate reversing contactor unit

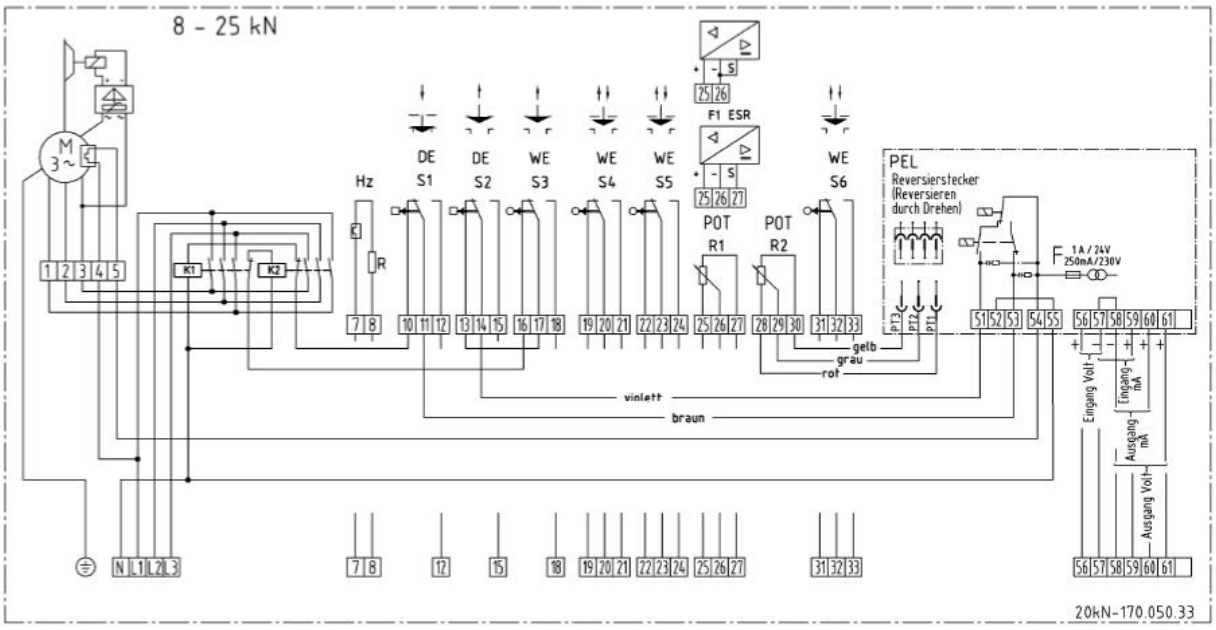

Fig. 1.5.1-6: Wiring diagram with 2 DE switches S1 and S2 and WE switch S3, 3-phase AC motor with thermoswitches, integral reversing contactor unit

Legend to the wiring diagrams

Mech. Bremse (nur bei Asynchr. Motor)	mech. brake (async. motor only)
Reversierstecker	reversing plug
Reversieren durch Drehen	reversing by turning
gelb	yellow
grau	grey
rot	red
violett	violet
braun	brown
blau	blue
Eingang Volt	Volt input
Eingang mA	mA input
Ausgang Volt	Volt output
mA Ausgang	mA output
Wendeschützeinheit (extern)	reversing contactor unit (external)