Pneumatic control valve in two way form with bellow sealing, DN65-150 PN 16 / 25, with 14kN actuator

Body: two way form, for heat transfer oil
Pressure range: body PN16, PN25, PN40
bellow PN25
Immersion length acc. to DIN EN 558, basic series 1
Flanges acc. to DIN EN 1092-1/2 type 21
Spindle sealing: double wall bellow
and safety stuffing box
Internal parts: stainless steel, replaceable seat rings
Flow characteristic: equal percentage (partially modified)
Positioning ratio: 30:1 (up to 50:1)
Leakage: < 0,01% Kvs



Actuator: diaphragm area 800 cm², ø420 mm
Control signal / closing pressure: see table
Operating mode: "Spring closes straightway "
Air connection: G1/4"
Operating pressure: 3,7…4,5 bar

Accessories, special types**:**
I/P-Positioner, control signal 4...20 mA (see page 390 8)
P/P-Positioner, control signal 0,2...1,0 bar (see page 390 5)
Electro-pneum. transformer (see page 390 3)
Solenoid valve for operating air (see page 393)
Limit switches (see page 39e)
Inductive limit switches (on request)
Manual operating device (on request)
Reduced Kvs- values (on request)
Weld-on ends (on request)
Flange drillings acc. to ANSI / JIS (on request)

Order text:
Pneumatic control valve in two way form
Material . . ., PN . ., DN . ., Kvs . . .
Spindle sealing with bellow
Spring closes straightway
Control signal . . . - . . . bar, closing pressure . . . bar
List-No.: PN16: 351 **4** . . Sg, PN25: 351 **5** . . Sg, PN25: 351 **6** . . Sg, PN25: 351 **E** . . Sg_p2
Accessories: . . .

Pressure-temperature ratings acc. to DIN EN 1092-2:

by:			-10...50	100	150	200	250	300	350	400	450	°C
PN16	351 **4**	EN-GJS-400-18-LT	16	16	15,5	14,7	13,9	12,8	11,2	-	-	bar
PN25	351 **5**	EN-GJS-400-18-LT	25	25	24,3	23	21,8	20	17,5	-	-	bar
PN25*	351 **6**	GP240GH+N	25	25	25	25	25	25	24	21	13,1	bar
PN25	351 **E**	GX5CrNiMo19-11-2	25	25	22,7	21	19,8	18,5	17,4	17,1	-	bar

** = acc. to KFM norm*

DN	**List-No.** PN16	PN25	PN25	PN25	**Kvs** m³/h	**Stroke** mm	**Closing pressure**** (bar) Type ...Sg
65	351 406Sg	351 506Sg	351 606Sg	351 E06Sg_p2	63	30	25,0
80	351 408Sg	351 508Sg	351 608Sg	351 E08Sg_p2	100	30	24,7
100	351 410Sg	351 510Sg	351 610Sg	351 E10Sg_p2	150	30	16,0
	351 460Sg	351 560Sg	351 660Sg	351 E60Sg_p2	100	30	25,0
125	351 412Sg	351 512Sg			230	40	10,0
	351 412Sg_140a	351 512Sg_140a			140	30	16,0
	351 412Sg_100a	351 512Sg_100a			100	30	24,7
150	351 415Sg				330	40	6,8
	351 415Sg_250a				250	40	10,0
	351 415Sg_150a				150	30	16,0

*** = DN200: see page 351420Sg/k, DN>200 on request*

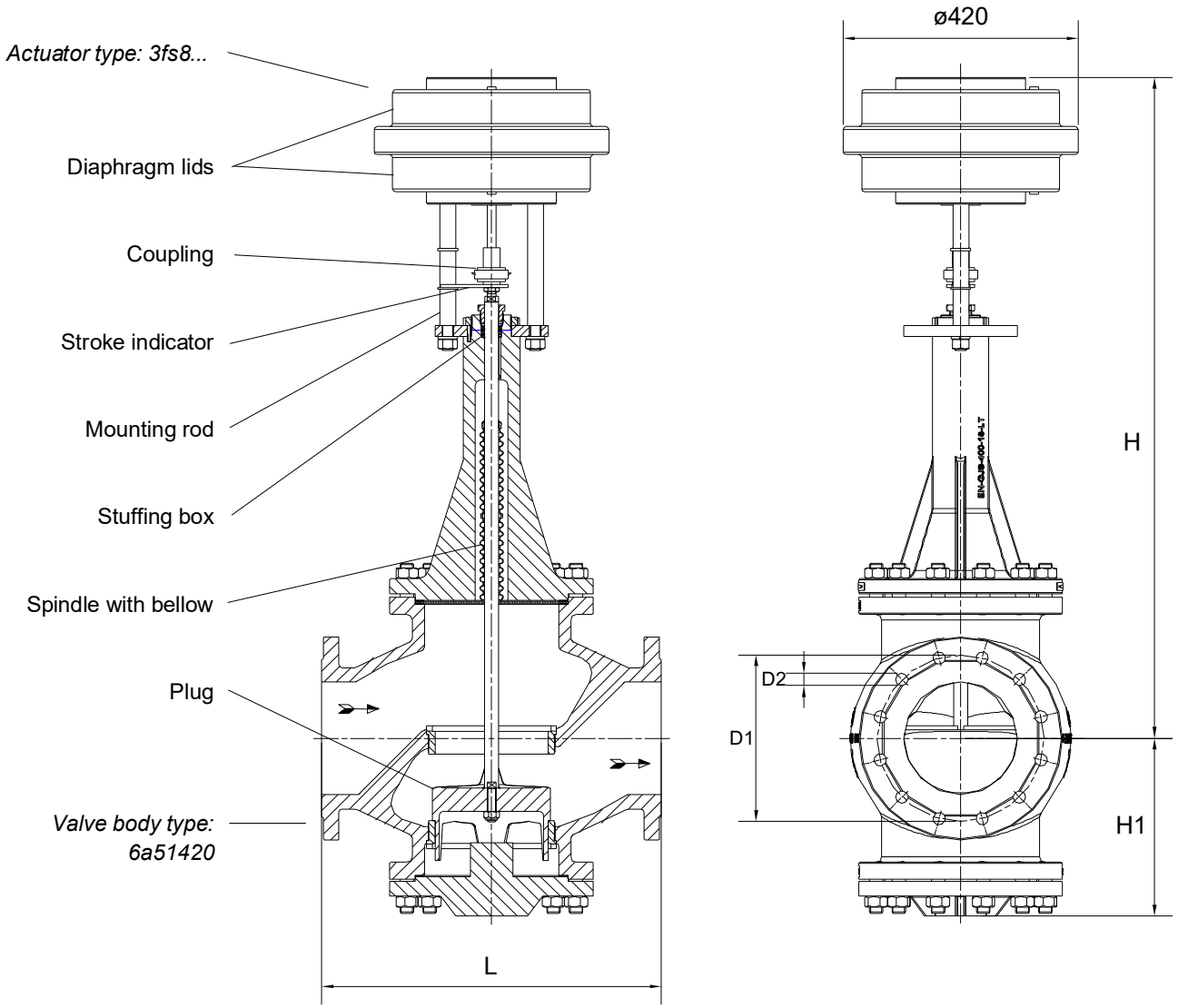

Dimensions

DN	200
Height H (mm)	1180
Length H1 (mm)	315
Length L (mm)	600
Weight (kg)	345

Flange connections acc. to DIN EN 1092-2

PN	D1 (mm)	D2 (mm)	Quantity of screws	Thread
16	295	22	12	M20

Overview

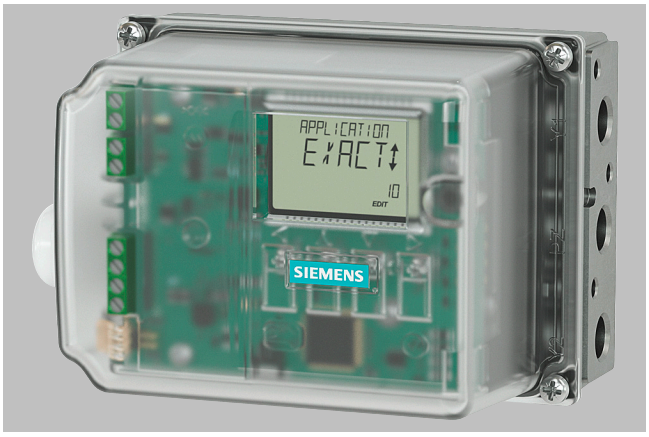

SIPART PS100 with polycarbonate lid



SIPART PS100 in aluminum enclosure

The SIPART PS100 electropneumatic positioner is used to control the process valve or damper position of pneumatic linear or part-turn actuators. The SIPART PS100 regulates the process valve according to the setpoint.

Benefits

The SIPART PS100 positioners offer the following advantages:

- Fast commissioning at the push of a button
- Simple operation via the local display and four buttons
- Local display symbols according to NAMUR NE 107
- Negligible air consumption in stationary operation
- Setting the application profile based on predefined selection options, e.g. close tight valve, open/close valve, small valve
- Rapid response in end positions means short travel times and a close tight valve.
- Insensitive to oscillations (vibrations) and steam hammer
- Leakage compensation ensures a constant actual value and protects the actuator
- Only one device version for linear and part-turn actuators
- Consistent parameter assignment with HART communication
- Safe use in hazardous areas

Application

The SIPART PS100 is used in the following industry sectors:

- Valve manufacturing
- Chemical industry
- Power supply
- Paper
- Water and wastewater
- Food and beverages
- Pharmaceuticals

The SIPART PS100 can be utilized in applications with pneumatic actuators and a setpoint signal of 4 ... 20 mA.

Custom designs

Adaptation of your SIPART PS100 positioner to your own brand with standardized features:

- Individual aluminum enclosure color
- Customized company logo on the enclosure
- A combination of the above features
- Further adjustments on request

The technical functions of the PS100 are therefore not limited. All features and the standard delivery times remain the same.

In addition to three functions, which have been prepared for the adjustment, additional special functions are available on request. Please contact your sales representative for more information.

Design

The SIPART PS100 positioner comprises the following components:

- Enclosure (base plate with lid)
- Electronics
- Wear-free, contact-free position detection
- Pneumatic block

The pneumatic block is located in the enclosure, the pneumatic connections for the inlet air and the actuating pressure on the right-hand side of the enclosure. The electrical connections are located on the left-hand side of the enclosure.
The SIPART PS100 positioner is fitted to the relevant pneumatic linear or part-turn actuator using an appropriate mounting kit. The positioner shaft is located on the underside of the base plate. The positioner shaft is connected to the spindle of the linear actuator or the actuator shaft of the part-turn actuator using the mounting kit.
The electronics are available with the following options:

- Analog output (AO) 4 to 20 mA
  The current position of the valve is converted into a 4 to 20 mA signal.
- Digital input and digital output (DI and DQ)
  - Position limit monitoring.
  - Output of an alarm in the event of a control deviation or a device fault.
  - Approach of a defined process valve position, disabling of keys, blocking of valve process valve by means of digital input.
- HART communication on parameter assignment and information on the device status

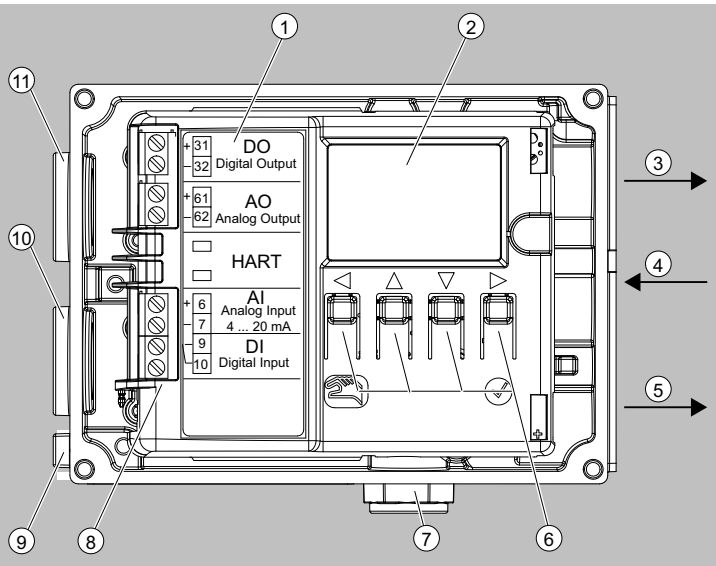

1. Wiring diagram on module cover
2. Display
3. Output: actuating pressure Y1
4. Input: supply air pressure PZ
5. Output: actuating pressure Y2 for double-acting actuators
6. Buttons
7. Exhaust air outlet with a sound absorber
8. Connecting terminals
9. Grounding, thread M4
10. Lower cable gland, thread M20x1.5
11. Upper cable gland, thread M20x1.5

SIPART PS100, enclosure with open lid

Function

Local operation is performed using the built-in local display and the four buttons. It enables, for example:

- Starting automatic commissioning with the press of a button
- Configuring the device
- Switching between the operation modes:
  - AUTO: The positioner controls the valve according to the analog input (AI) 4 to 20 mA
  - MANUAL: Valve movement with the middle keys

A hallmark of the SIPART PS100 is its own extremely low consumption of air. Compressed air is only required to move the valve. In the controlled state, consumption of air is negligible.

Selection and ordering data

SIPART PS100 electropneumatic positioner without explosion protection	Article No. 6DR71	●	●	-	0	●	●	●	●	-	●	●	●	0
Click the article number for online configuration in the PIA Life Cycle Portal.														
Enclosure material														
Polycarbonate, lid with inspection window		0												
Aluminum, lid without inspection window		1												
Actuator type														
For single-acting actuators			1											
For double-acting actuators			2											
Communication														
4 ... 20 mA						N								
4 ... 20 mA, HART						A	N							
Device option 1														
Without device option 1							N							
With digital input (DI) and digital output (DQ)							A							
Device option 2														
Without device option 2								0						
With analog output (AQ) 4 ... 20 mA								1						
Thread of the lower cable entry/cable gland														
M20 × 1.5/without cable gland									0					
M20 × 1.5/with plastic cable gland									1					
M20 × 1.5/with metal cable gland									2					
½-14 NPT/without cable gland									4					
Thread of the upper cable entry/cable gland														
M20 × 1.5/with blanking plug											0			
M20 × 1.5/with plastic cable gland											1			
M20 × 1.5/with metal cable gland											2			
½-14 NPT/without cable gland											4			
Pneumatic thread														
G¼												A		
¼-18 NPT												B		
Pneumatic accessories														
Without gauge block													A	
Pressure gauge made of plastic, block made of aluminum													C	
Pressure gauge made of metal, block made of aluminum													D	
Gauge made of stainless steel, block made of stainless steel													E	

SIPART PS100 electropneumatic positioner with explosion protection	Article No. 6DR71	●	●	-	●	●	N	●	●	-	●	●	●	0
Click the article number for online configuration in the PIA Life Cycle Portal.														
Enclosure material														
Polycarbonate, lid with inspection window		0			1									
Aluminum, lid without inspection window		1												
Actuator type														
For single-acting actuators			1											
For double-acting actuators			2											
Degree of protection														
Ex i (ATEX, IECEx,...) SITRANS I200 output isolation amplifier sold separately (7NG4131-1AA00).					1									
Ex i; Ex e (ATEX, IECEx,...) SITRANS I200 output isolation amplifier sold separately (7NG4131-1AA00).					2									
Ex i; Ex e; Ex t (ATEX, IECEx,...) SITRANS I200 output isolation amplifier sold separately (7NG4131-1AA00).					3									
Communication														
4 ... 20 mA						N								
4 ... 20 mA, HART						A								
Device option 2														
Without device option 2								0						
With analog output (AQ) 4 ... 20 mA SITRANS I100 isolating power supply sold separately (7NG4124-1AA00).								1						

Selection and ordering data (continued)

SIPART PS100 electropneumatic positioner with explosion protection	Article No. 6DR71	● ● - ● ● N ● ● - ● ● ● 0
Thread of the lower cable entry/cable gland		
M20 × 1.5/without cable gland		0
M20 × 1.5/with plastic cable gland		1
M20 × 1.5/with metal cable gland		2
½-14 NPT/without cable gland		4
Thread of the upper cable entry/cable gland		
M20 × 1.5/with blanking plug		0
M20 × 1.5/with plastic cable gland		1
M20 × 1.5/with metal cable gland		2
½-14 NPT/without cable gland		4
Pneumatic thread		
G¼		A
¼-18 NPT		B
Pneumatic accessories		
Without gauge block		A
Pressure gauge made of plastic, block made of aluminum		C
Pressure gauge made of metal, block made of aluminum		D
Gauge made of stainless steel, block made of stainless steel		E

Options Add "-Z" to article number, specify order code and plain text	Order code
TAG plate made of stainless steel, 3-line Input fields Text line 1: plain text from Y15 Text line 2: plain text from Y16 Text line 3: plain text from Y17	**A20**
Version with stainless steel sound absorbers	**A40**
Explosion protection (Japan)	**E29**
EN 10204 certificate type 2.1	**C35**
DNV (Det Norske Veritas)	**S10**
SITRANS AW050 Bluetooth adapter for wireless communication and data transfer	**F50**
Measuring point description Input field: Max. 32 characters; specify in plain text	**Y15**
Measuring point text Input field: Max. 32 characters; specify in plain text	**Y16**
Measuring point number (TAG no.) Input field: Max. 8 characters; specify in plain text	**Y17**

Accessories	Article No.
SITRANS AW050 Bluetooth adapter kit for wireless communication and data transfer for SIPART PS100	**6DR4004-1BT**
Gauge block	
With pressure gauges made of plastic IP31 (MPa, bar)	
• Block made of aluminum, single-acting, G¼	**6DR4004-1M**
• Block made of aluminum, double-acting, G¼	**6DR4004-2M**
With pressure gauges made of plastic IP31 (MPa, psi)	
• Block made of aluminum, single-acting, ¼-18 NPT	**6DR4004-1MN**
• Block made of aluminum, double-acting, ¼-18 NPT	**6DR4004-2MN**
With gauges made of metal IP44 (MPa, bar, psi)	
• Block made of aluminum, single-acting, G¼	**6DR4004-1P**

Accessories	Article No.
• Block made of aluminum, double-acting, G¼	**6DR4004-2P**
• Block made of aluminum, single-acting, ¼-18 NPT	**6DR4004-1PN**
• Block made of aluminum, double-acting, ¼-18 NPT	**6DR4004-2PN**
With pressure gauges made of stainless steel 316 IP54 (MPa, bar, psi)	
• Block made of stainless steel 316, single-acting, G¼	**6DR4004-1Q**
• Block made of stainless steel 316, double-acting, G¼	**6DR4004-2Q**
• Block made of stainless steel 316, single-acting, ¼-18 NPT	**6DR4004-1QN**
• Block made of stainless steel 316, double-acting, ¼-18 NPT	**6DR4004-2QN**
Venting gauge block Depressurizing of Y2 on compressed air failure with pressure gauges made of metal IP44 (MPa, bar, psi). The double-acting actuator with springs moves into the safety position.	
• Block made of aluminum, double-acting, G¼	**6DR4004-2RE**
• Block made of aluminum, double-acting, ¼-18 NPT	**6DR4004-2RF**
Booster (Cv = 2) Aluminum with pressure gauges made of metal IP44 (MPa, bar, psi)	
• Single-acting, G½	**6DR4004-1RJ**
• Double-acting, G½	**6DR4004-2RJ**
• Single-acting, ½-14 NPT	**6DR4004-1RK**
• Double-acting, ½-14 NPT	**6DR4004-2RK**
Mounting kit for NAMUR part-turn actuators	
VDI/VDE 3845, with plastic coupling wheel, without mounting console	**6DR4004-8D**
VDI/VDE 3845, with stainless steel coupling, without mounting console	**TGX:16300-1556**

Selection and ordering data (continued)

Accessories	Article No.
Console for mounting on NAMUR part-turn actuators VDI/VDE 3845	
• 80 × 30 × 20 mm (3.15 × 1.18 × 0.79 inches)	6DR4004-1D
• 80 × 30 × 30 mm (3.15 × 1.18 × 1.18 inches)	6DR4004-2D
• 130 × 30 × 30 mm (5.12 × 1.18 × 1.18 inches)	6DR4004-3D
• 130 × 30 × 50 mm (5.12 × 1.18 × 1.97 inches)	6DR4004-4D
Mounting kit for other part-turn actuators The following mounting consoles can be used together with the NAMUR part-turn actuator mounting kit 6DR4004-8D.	
SPX (DEZURIK) Power Rac, sizes R1, R1A, R2 and R2A	TGX:16152-328
Masoneilan Camflex II	TGX:16152-350
Fisher 1051/1052/1061, to 30, 40, 60 to 70	TGX:16152-364
Fisher 1051/1052, size 33	TGX:16152-348
Mounting kit for NAMUR linear actuators	
NAMUR-linear actuator with short lever (2 ... 35 mm (0.08 ... 1.38 inches))	6DR4004-8V
Lever arm for strokes of 35 ... 130 mm (1.38 ... 5.12 inches) without NAMUR mounting bracket	6DR4004-8L

Accessories	Article No.
Reduced mounting kit (as for 6DR4004-8V but without fixing angle and U-bracket), with short lever with up to 35 mm (1.38 inches) stroke	6DR4004-8VK
Reduced mounting kit (as for 6DR4004-8V but without fixing angle and U-bracket), with long lever > 35 mm (1.38 inches) stroke	6DR4004-8VL
Tapered roller made of stainless steel 316 for replacing the tapered roller made of plastic in the mounting kits 6DR4004-8V, -8VK, -8VL	6DR4004-3N
Terminal blocks made of stainless steel 316 for replacement of the aluminum terminal blocks in the 6DR4004-8V, -8VK and -8VL mounting kits	6DR4004-3M
Mounting kit for other linear actuators	
MASONEILAN type 87/88	TGX:16152-1210
MASONEILAN type 37/38, all sizes	TGX:16152-1215
Fisher type 657/667, size 30 ... 80	TGX:16152-900
Interface according to VDI/VDE 3847	
Interface according to VDI/VDE 3847 for single and double-acting, CATS-equipped (Clean Air To Spring) on single-acting, not for flameproof enclosure	6DR4004-5PB
HART modem with USB interface	7MF4997-1DC

Scope of delivery for positioner

1 SIPART PS100 positioner as ordered

Technical specifications

SIPART PS100	
Input	
Analog input (AI), terminals 6 and 7	
• Nominal signal range	4 ... 20 mA
• Minimum current to maintain operation	3.8 mA
• Maximum load voltage	6.5 V (corresponds to 325 Ω at 20 mA)
• Static destruction limit	± 40 mA
• Type of communication	HART 7
Digital input (DI), terminals 9 and 10	
• Galvanic isolation	Electrically connected to analog input Galvanically isolated from the outputs
• Signal state 0, floating contact open	> 300 kΩ
• Signal state 1, floating contact closed	< 3 kΩ
• Contact load	Suitable only for floating contact; max. contact load < 20 µA, 3 V
Output	
Analog output (AO), terminals 61 and 62	
• Connection type	2-wire connection
• Nominal signal range	4 ... 20 mA
• Fault current	< 3.6 mA
• Supply voltage U_H	12 ... 30 V
• External load R_B [kΩ]	≤ (U_H [V] - 12 V)/I_O [mA]
• Resolution in relation to the nominal signal range	0.05%
• Transmission error in relation to the nominal signal range	± 0.3%
• Effect of ambient temperature	± 0.1%/10K
• Maximum residual ripple	± 0.5%
• Galvanic isolation	Galvanically isolated from the other electrical inputs and outputs
Digital output (DQ), terminals 31 and 32	
• Maximum supply voltage U_H	35 V
• External current consumption	To be limited to 50 mA
• "Conductive" state	• Permissible rated current 50 mA • Maximum terminal voltage 3 V • Overload-proof
• "Locked" state "Locked" is also the state if the device is faulty or analog input (AI) is = 0 mA.	I < 60 µA
Operating conditions	
Ambient conditions for operation according to IEC 60068-2	For indoor and outdoor use
Ambient temperature	
• Ambient temperature	-20 ... +80 °C (-4 ... +176 °F)
• Relative humidity	0 ... 100%
Pollution degree according to IEC 61010-1	2
Overvoltage category according to IEC 61010-1	II
Degree of protection of enclosure	
• According to IEC 60529	IP66

Technical specifications (continued)

SIPART PS100	
• According to NEMA 250	Type 4X
Corrosion protection according to EN ISO 9227:2022 and EN ISO 12944:2017	
• 6DR710 polycarbonate enclosure	C5-M medium durability
• 6DR711 aluminum enclosure	C5-M medium durability
Vibration resistance	
• Harmonic oscillations (sine) according to IEC 60068-2-6	3.5 mm (0.14"), 2 ... 27 Hz, 3 cycles/axis, 98.1 m/s² (321.84 ft/s²), 27 ... 300 Hz, 3 cycles/axis
• Bumping (half-sine) according to IEC 60068-2-27	150 m/s² (492 ft/s²), 6 ms, 1 000 shocks/axis
• Noise (controlled digitally) according to IEC 60068-2-64	10 ... 200 Hz; 1 (m/s²)²/Hz (3.28 (ft/s²)²/Hz) 200 ... 500 Hz; 0.3 (m/s²)²/Hz (0.98 (ft/s²)²/Hz), 4 hours/axis
Climatic class	According to IEC EN 60721-3
• Storage	1K23, -40 ... +80 °C (-40 ... +176 °F)
• Transport	2K13, -40 ... +80 °C (-40 ... +176 °F)
Pneumatic data	
Pneumatic operating medium	Compressed air, carbon dioxide (CO_2), nitrogen (N_2), noble gasses
• Operating pressure	1.4 ... 7 bar (20.3 ... 101.5 psi)
Air quality according to ISO 8573-1	
• Solid particulate size and density	Class 3
• Pressure dew point	Class 3 (min. 20 K (36 °F) below ambient temperature)
• Oil content	Class 3
Flow rate	
• Aerate process drive	
- Supply pressure 4 bar (58 psi)	7.1 Nm³/h (31.3 USgpm)
- Supply pressure 6 bar (87 psi)	9.8 Nm³/h (43.1 USgpm)
• Depressurize process drive	
- Actuating pressure 4 bar (58 psi)	13.7 Nm³/h (60.3 USgpm)
- Actuating pressure 6 bar (87 psi)	19.2 Nm³/h (84.5 USgpm)
Leakage actuator chamber (positioner portion)	< 6 · 10^{-4} Nm³/h (0.0026 USgpm)
Typical auxiliary power consumption in the controlled state	0.01 Nm³/h (0.044 US gpm)
Sound pressure	• $L_{A\,eq}$ < 75 dB • $L_{A\,max}$ < 80 dB
Structural design	
Supported actuator types	
• Linear actuator, range of stroke	10 ... 130 mm (0.39 ... 5.12")
• Part-turn actuator, angle-of-rotation range	10 ... 100°
Weight, positioner without accessories	Approx. 1.0 kg (2.20 lbs)
Material	
• Lid	• Aluminum • Polycarbonate
• Base plate	Aluminum
• Gauge block	Aluminum, anodized or stainless steel 316

Technical specifications (continued)

SIPART PS100	
• Pressure gauge	• Plastic, mechanics brass • Stainless steel, mechanics brass nickel-plated • Stainless steel, mechanics stainless steel 316
Torques	
• Lid fixing screws	1.5 Nm (1.1 ft lb)
• Part-turn actuator fixing screws DIN 933 M6x12-A2	5 Nm (3.7 ft lb)
• Linear actuator fixing screws DIN 933 M8x16-A2	12 Nm (8.9 ft lb)
• Gland pneumatic G¼	15 Nm (11.1 ft lb)
• Gland pneumatic ¼-18 NPT	
- Without sealant	12 Nm (8.9 ft lb)
- With sealant	6 Nm (4.4 ft lb)
• M20 cable gland, plastic	4 Nm (3 ft lb)
• M20 cable gland, metal	6 Nm (4.4 ft lb)
• ½-14 NPT cable gland, metal	15 Nm (11.1 ft lb)
• ½-14 NPT cable gland, metal in the NPT adapter	68 Nm (50 ft lb)
IMPORTANT: To avoid damage to the device, the NPT adapter must be held in place while the NPT gland is screwed into the NPT adapter.	
• Union nut made of plastic	2.5 Nm (1.8 ft lb)
• Union nut made of metal	4 Nm (3 ft lb)
• Gauge block fixing screws	6 Nm (4.4 ft lb)
Pressure gauge	
• Degree of protection	
- Plastic pressure gauge, mechanics brass	IP31
- Metal pressure gauge, mechanics brass nickel-plated	IP44
- Stainless steel pressure gauge, mechanics stainless stee 316L	IP54
Connections, electrical	
• Screw terminals	2.5 mm^2 AWG30-14
• Cable bushing	M20x1.5 or ½-14 NPT with NPT adapter
Connections, pneumatic	G¼ or ¼-18 NPT
Controller	
Controller unit	
• Five-point switch	Adaptive
• Deadband	
- Adjustable maximum value	± 0.1 ... 3%, plus hysteresis (half of the deadband, but at least 0.2%)
- Minimization of the maximum value	Always active
Analog input (AI), terminals 6 and 7	
• Sampling interval	50 ms
• Resolution	0.05%

Technical specifications (continued)

SIPART PS100	
Position detection	
• Sampling interval	10 ms
• Resolution at 10 mm stroke	0.1%
• Temperature influence effect	0.1%/10 K (0.1%/18 °F)
Certificates and approvals	
DoC compliance	You can find the appropriate directives and standards, including the relevant versions, in the Declaration of Conformity on the internet.
UL conformity	The SIPART PS100 has documented compliance with the safety requirements in the USA and Canada. These are UL classified, recognized and listed.
Explosion protection	You can find details on explosion protection in the compact operating instructions and the explosion protection certificates.

Dimensional drawings

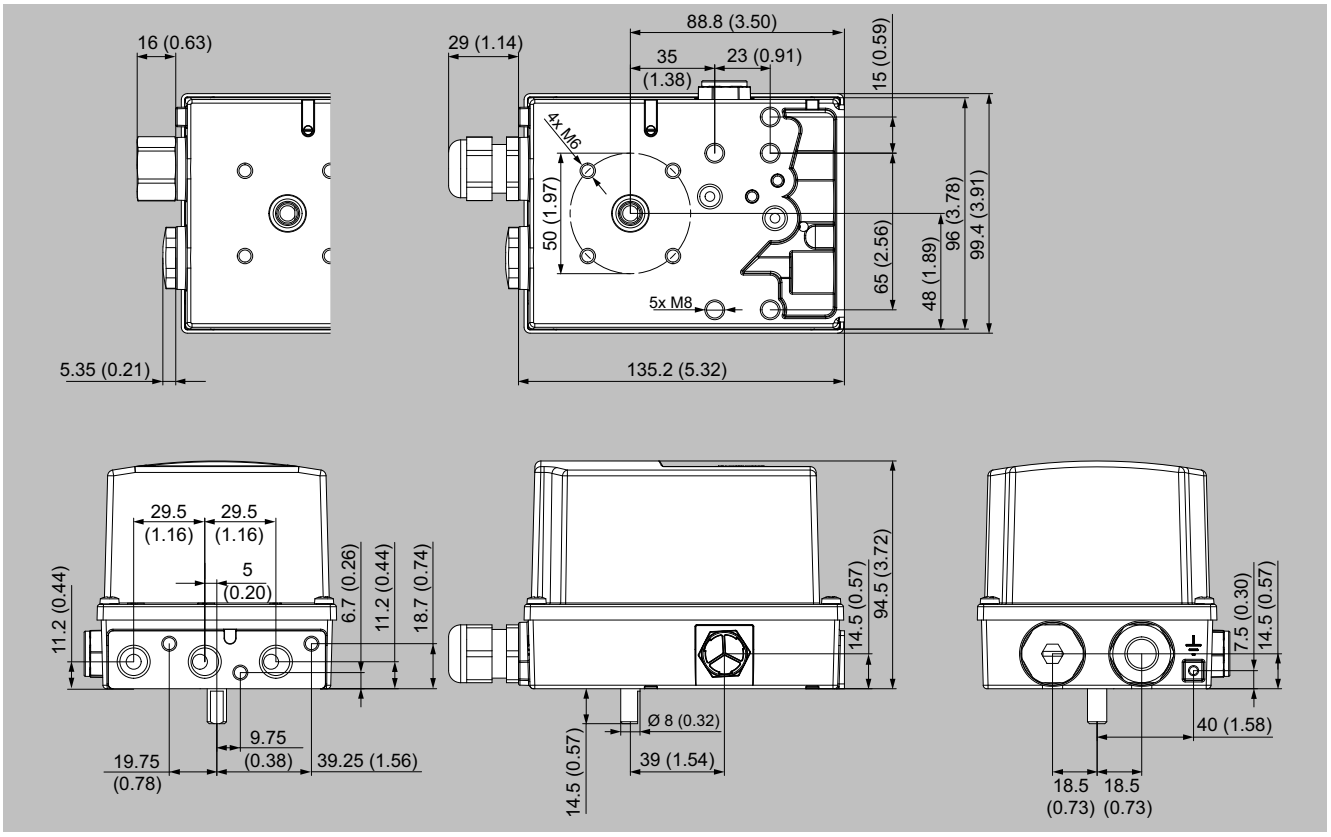

Non-flameproof enclosure, dimensions in mm (inch)